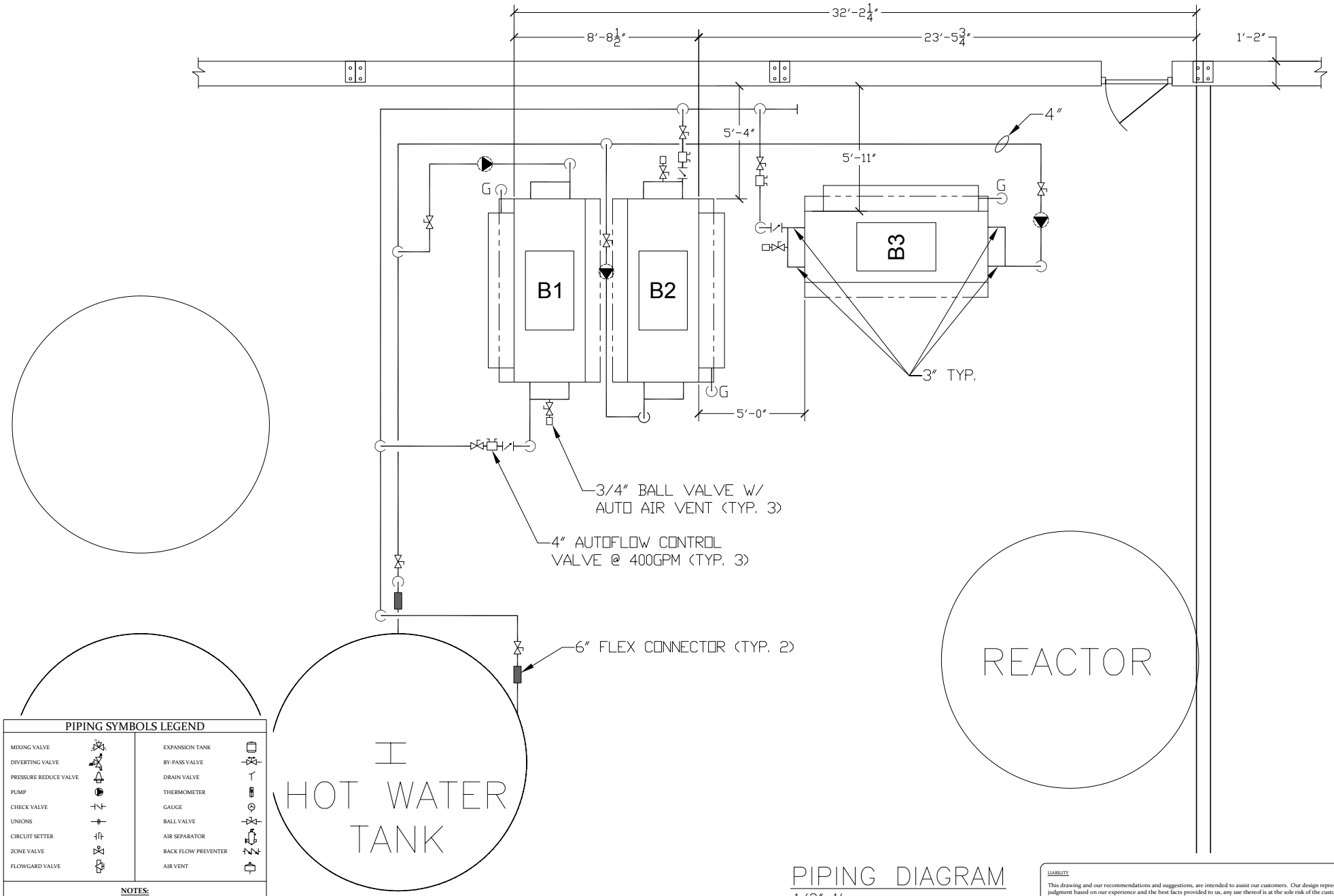

PIPING SYMBOLS LEGEND

MIXING VALVE		EXPANSION TANK	
DIVERTING VALVE		BY-PASS VALVE	
PRESSURE REDUCE VALVE		DRAIN VALVE	
PUMP		THERMOMETER	
CHECK VALVE		GAUGE	
UNIONS		BALL VALVE	
CIRCUIT SETTER		AIR SEPARATOR	
ZONE VALVE		BACK FLOW PREVENTER	
FLOWGARD VALVE		AIR VENT	

NOTES:
* MAX PIPE SPACING TO BE 12 INCHES OR
4 PIPE DIAMETERS APART OR WHICH EVER IS LESS.

PIPING DIAGRAM

1/2″=1′

LIABILITY

This drawing and our recommendations and suggestions, are intended to assist our customers. Our design represents our best judgment based on our experience and the best facts provided to us, any use thereof is at the sole risk of the customer.

It is assumed that the customer will install the THAW-PAK system in compliance with all local, state and national codes.

CONSULTANTS: GOYETTE MICHIGAN

thaw-PAK

PROJECT NAME: AGRO-CULTURE ASHLEY MICHIGAN

THAW-PAK DISTRIBUTOR: PERFORMANCE engineering group

DRAWN BY: *Gordon Faustich*

REVIEWED BY:

APPROVED BY:

ISSUED FOR

10/12/10	SUBMITTAL
10/20/10	UPDATED PIPING ADDED M
02/22/11	UPDATED PER GOYETTE SKETCH

PROPERTY OF THAW-PAK

This drawing is the property of THAW-PAK, is furnished prepared to assist in the installation of our system. Customer agrees to keep confidential and not disclose this drawing or copies thereof without our written consent.

DRAWING NO. PEG10-024P_B

SHEET NO. **P2**

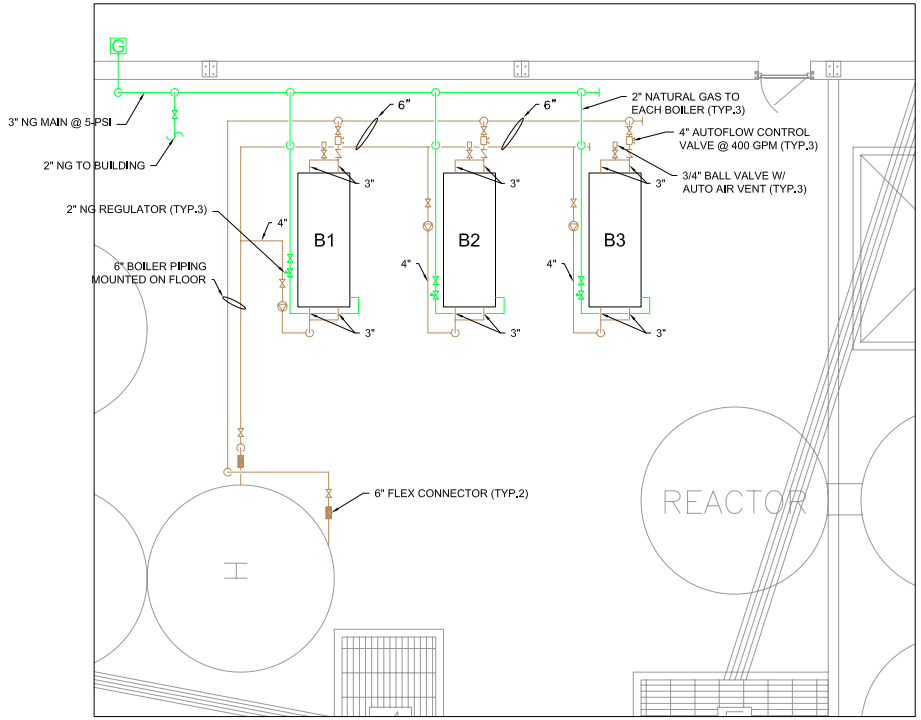

BOILER PIPING
SCALE: 1/4" = 1'

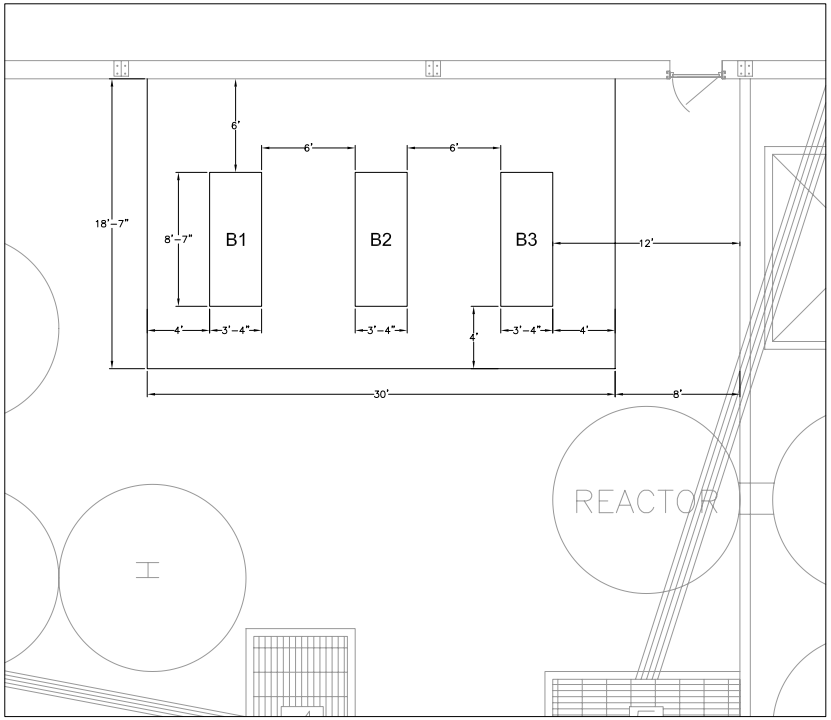

BOILER CLEARANCES
SCALE: 1/4" = 1'

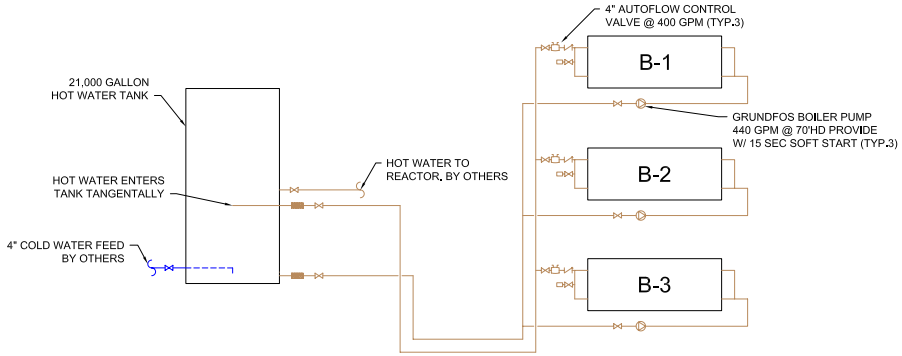

PIPING SCHEMATIC
SCALE: NOT TO SCALE

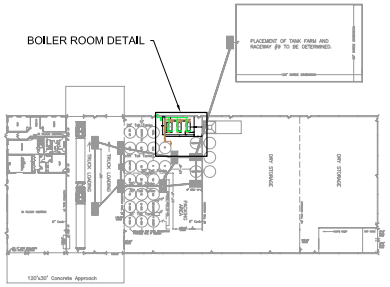

PLAN VIEW
SCALE: 1/64" = 1'

#	DATE	ISSUED FOR:
1	10/18/10	OWNER REVIEW
-	-	-
-	-	-
-	-	-
-	-	-
-	-	-
-	-	-
-	-	-

GOYETTE MECHANICAL
3842 GOREY AVE., FLINT, MI 48506
PH: (810) 743-6883 FAX: (810) 743-9090

TITLE:
PROCESS HOT WATER BOILERS
AGRO-CULTURE LIQUID FERTILIZERS
ASHLEY, MI

JOB #:

DRAWING NAME:

M-1

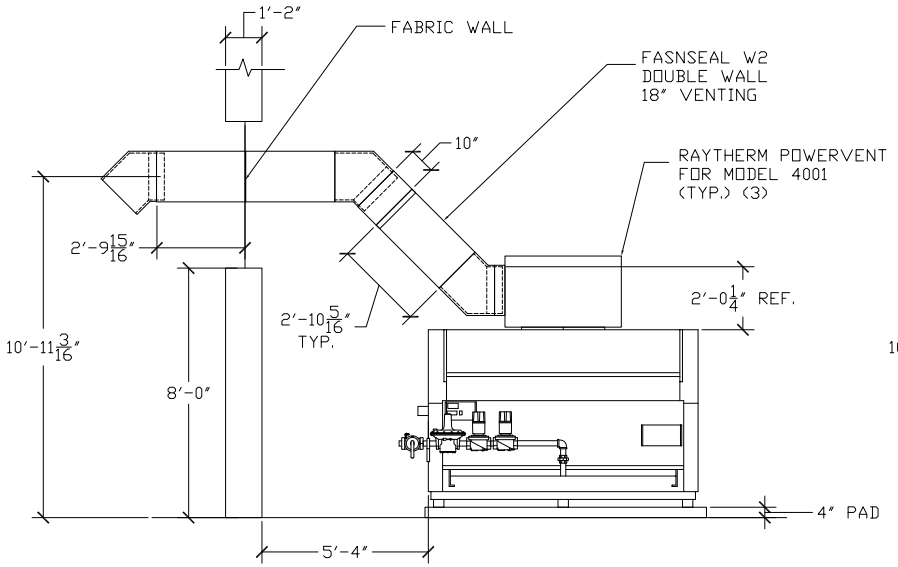

BOILER B1 & B2

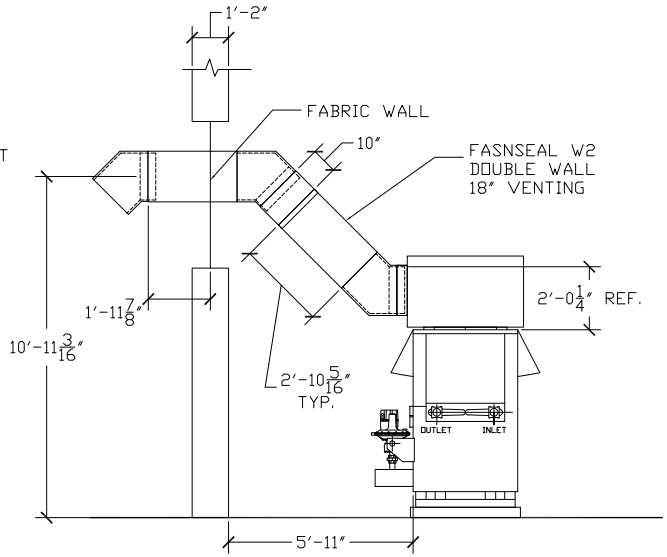

BOILER B3

VENTING DIAGRAM

1/2"=1'

LIABILITY

This drawing and our recommendations and suggestions, are intended to assist our customers. Our design represents our best judgment based on our experience and the best facts provided to us, any use thereof is at the sole risk of the customer.

It is assumed that the customer will install the THAW-PAK system in compliance with all local, state and national codes.

CONSULTANTS: GOYETTE MICHIGAN

thaw PAK

PROJECT NAME: AGRO-CULTURE MICHIGAN ASHLEY

THAW-PAK DISTRIBUTOR: PERFORMANCE engineering group

DRAWN BY: Gordon Faustich

REVIEWED BY:

APPROVED BY:

ISSUED FOR	
10/12/10	SUBMITTAL
10/20/10	UPDATED PIPING ADDED M.
02/22/11	UPDATED PER GOYETTE SKETCH

PROPERTY OF THAW-PAK

This drawing is the property of THAW-PAK, is furnished or prepared to assist in the installation of our system. Customer agrees to keep confidential and not disclose this drawing or copies thereof without our written consent.

DRAWING NO. PEG10-024P_B

SHEET NO. P1